NAD

SERVICE MANUAL

3225PE
3020i

INTEGRATED AMPLIFIERS

CONTENTS
3225PE/3020i

REAR / FRONT PANEL CONNECTIONS	PAGE 3
SPECIFICATIONS	PAGE 4
ALIGNMENT METHOD	PAGE 5
3225PE/3020i PCB LAYOUT AND WIRING DIAGRAM	PAGE 6
3225PE PCB LAYOUT	PAGE 7 — 8
3225PE SCHEMATIC DIAGRAM	PAGE 9 — 10
3020i PCB LAYOUT	PAGE 11 — 12
3020i SCHEMATIC DIAGRAM	PAGE 13 — 14
3225PE/3020i PARTS LIST	PAGE 15
3225PE/3020i PARTS LIST, EXPLODED VIEW	PAGE 16 — 17
PACKING DIAGRAM	PAGE 18

REAR PANEL

1. AC Line Cord.
2. AC Outlets (not in U.K. version).
3. Speakers.
4. Phono Input.
5. Phono Ground.
6. CD/Aux Input.
7. Tuner Input.
8. Tape Input/Output.
9. Soft Clipping.
10. Speaker Impedance.
11. Preamp Out/Main In

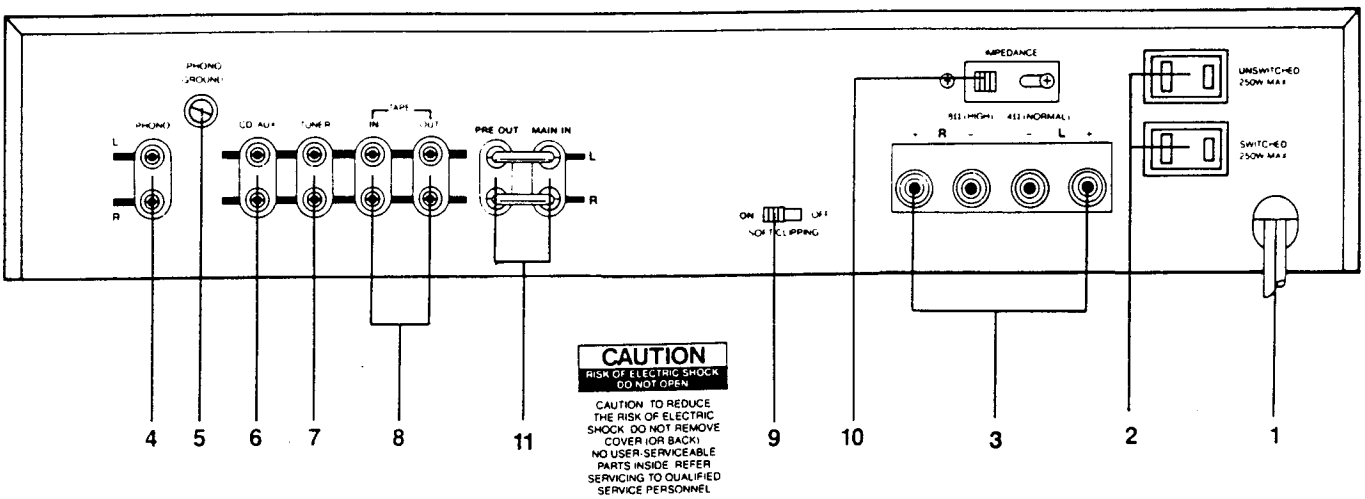

FRONT PANEL

1. Power.
2. Phones.
3. Bass.
4. Treble.
5. Balance.
6. Input Selector.
7. Tape Monitor.
8. Mono.
9. Low Level.
10. Volume.

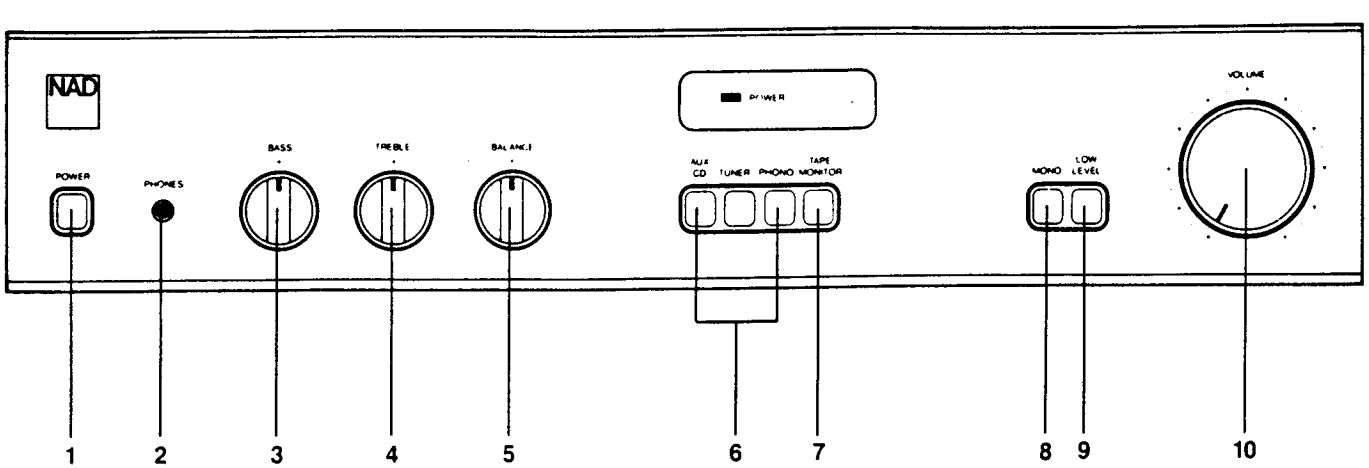

INTEGRATED AMPLIFIER SPECIFICATION NAD 3020i/3225PE

		3020i	3225PE
Power Amplifier Section			
Stereo Mode			
CONTINUOUS AVERAGE POWER OUTPUT INTO 8 OHMS		20W (13dbW)	25W (14dbW)
(Min. Power per channel, 20Hz-20KHz, both channels driven, with no more than rated distortion)			
Rated Distortion (THD 20Hz-20KHz)		0.03%	0.03%
Clipping Power (Maximum continuous power per channel)		30W	40W
IHF Dynamic Headroom at 8 ohms		+3db	+4db
IHF Dynamic Power (Maximum short term power per channel)			
	8 ohms:	40W(16dbW)	60W(18dbW)
	4 ohms:	40W(16dbW)	85W(19dbW)
	2 ohms:	50W(17dbW)	90W(19.5dbW)
Slew Factor		> 50	> 50
Slew Rate		15V/uSec	15V/uSec
Damping Factor (ref. 8 ohms 50 Hz)		> 40	> 40
Input Impedance		R=20Kohm C=470pf	R=20Kohm C=820pf
Input Sensitivity at 8 ohms	1W	200mV	
	20W	900mV	
	25W		1V
Voltage Gain		X14 (23db)	X14 (23db)
Frequency Response		6Hz to 80KHz +0,—3db	6Hz to 60KHz +0,—3db
Signal/Noise ratio, A Weighted			
Ref. 1W		100db	100db
Ref. Rated power		113db	114db
THD (Total Harmonic Distortion 20Hz-20KHz, from 250mW to rated output)		< 0.03%	< 0.03%
SMPTE I.M. (Intermodulation Distortion, 60Hz+7KHz, 4:1 From 250mW to rated output)		< 0.03%	< 0.03%
IHF I.M. (CCIF IM Distortion, 19+20KHz at rated output)		< 0.03%	< 0.03%
Preamplifier Section			
Phono Input			
Input Impedance (R and C)	MM:	47Kohm + 300pf	47Kohm + 300pf
Input Sensitivity ref. 1W/20W	MM:	0.55mV/2.4mV	
1W/25W 1KHz	MM:		0.52mV/2.5mV
Input Overload at 20Hz	MM:	20mV	20mV
1KHz		200mV	200mV
20KHz		1.7V	1.7V
RIAA Accuracy		+/—0.5db	+/—0.5db
Signal/Noise ratio (A-Weighted with cartridge connected) ref. 5mV in.	MM:	75db	75db
Line Level Inputs (CD, Video, Tape)			
Input Impedance (R and C)		40Kohm + 440pf	40Kohm + 440pf
Input Sensitivity ref. 1W/20W		33mV/150mV	
1W/25W			34mV/160mV
Maximum Input Signal		> 10V	> 10V
Signal/Noise ratio (ref. 1W)		87db	87db
(A Weighted) (ref. rated power)		100db	101db
Frequency Response, 20Hz-20KHz		+0.5db, —1db	+0.5db, —1db
Infrasonic Filter		—3db at 12Hz 18db/Octave	—3db at 12Hz 18db/Octave
THD (20Hz-20KHz at 5V RMS Out)		0.01%	0.01%
Line Level Outputs			
Preamp Output Impedance		600 ohms	600 ohms
Maximum Output Level		14V	12V
Tape output Impedance		Source Z + 2K ohms	Source Z + 2K ohms
Controls			
Treble	10KHz	+/— 7db	+/— 7db
Bass	50Hz	+/— 10db	+/— 10db
Audio Muting (Low Level)		—20db	—20db
Power Consumption		140W	150W
Net Weight		5Kg	5Kg
Dimension (Width x Height x Depth)		420x80x250mm	420x80x250mm

ALIGNMENT METHOD

AUDIO SECTION 3225PE/3020i

IMPORTANT
Speaker impedance switch should be in 8 ohm position while adjust center voltage and idling current.

INITIAL ADJUSTMENT (No load connected)

A. CENTER VOLTAGE
   1. Connector DC millivoltmeter to L channel output terminal.
   2. Turn on and adjust to 0 V+/—30mV with R411 (470 ohm). Connect DC millivoltmeter to R channel output terminal and adjust R412 to 0 V+/—30mV.

B. IDLING CURRENT
   1. Remove solder short across R455 and R456.
   2. Connect DC millivoltmeter across R455 (1 ohm) (output transistor's collector resistor) and adjust R443 for 26-30mV reading on meter. Repeat adjustment with R444, connecting meter across R456 (1 ohm).
   3. Leave power on for minimum 5 minutes.

FINAL ADJUSTMENT

C. CENTER VOLTAGE
   1. Repeat step A about.

D. IDLING CURRENT
   1. Repeat step B and adjust with R443, R444 for 30mV reading on meter.
   2. After the alignment is finished, 1 ohm resistor R455, R456 is shorted by solder short.

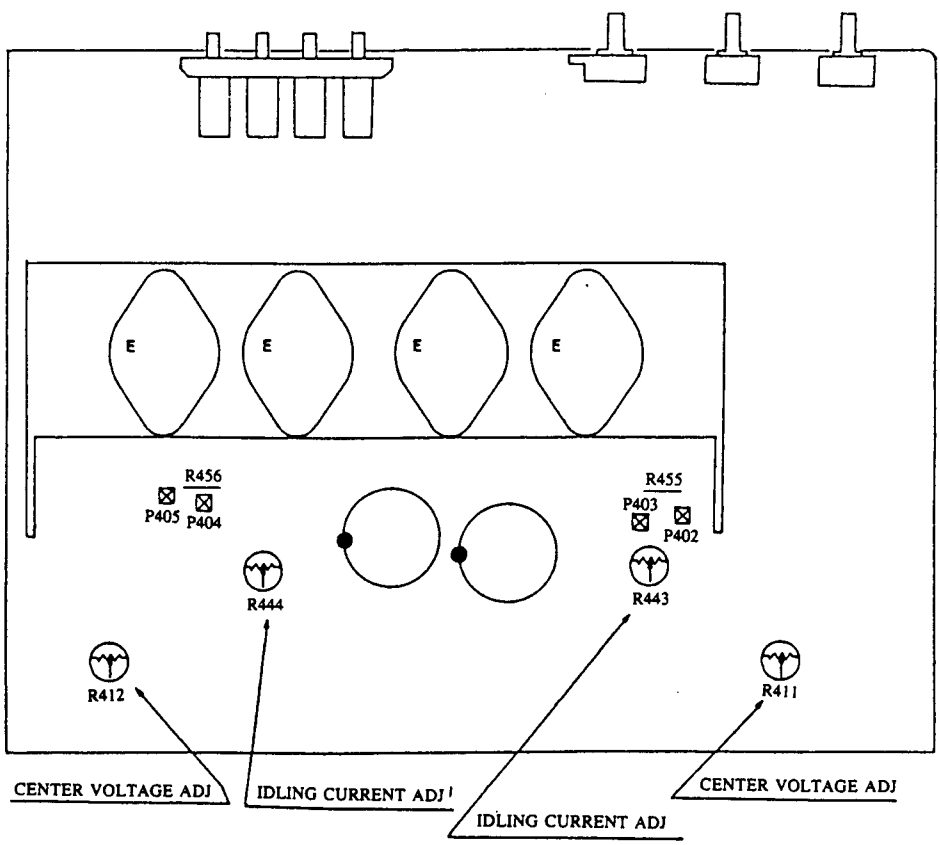

3225PE/3020i PCB LAYOUT & WIRING-DIAGRAM

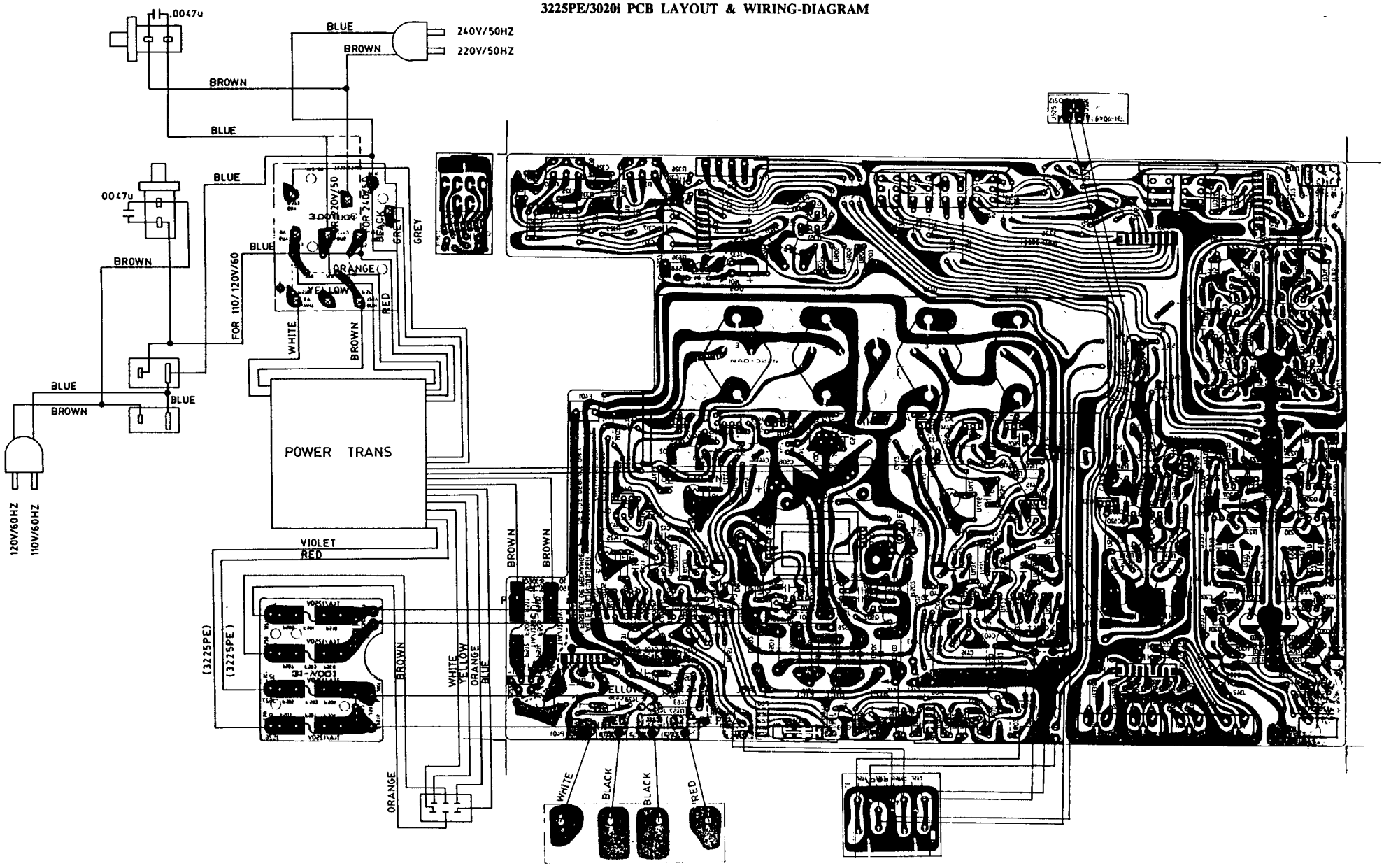

NAD3225PE AMPLIFIER PCB LAYOUT

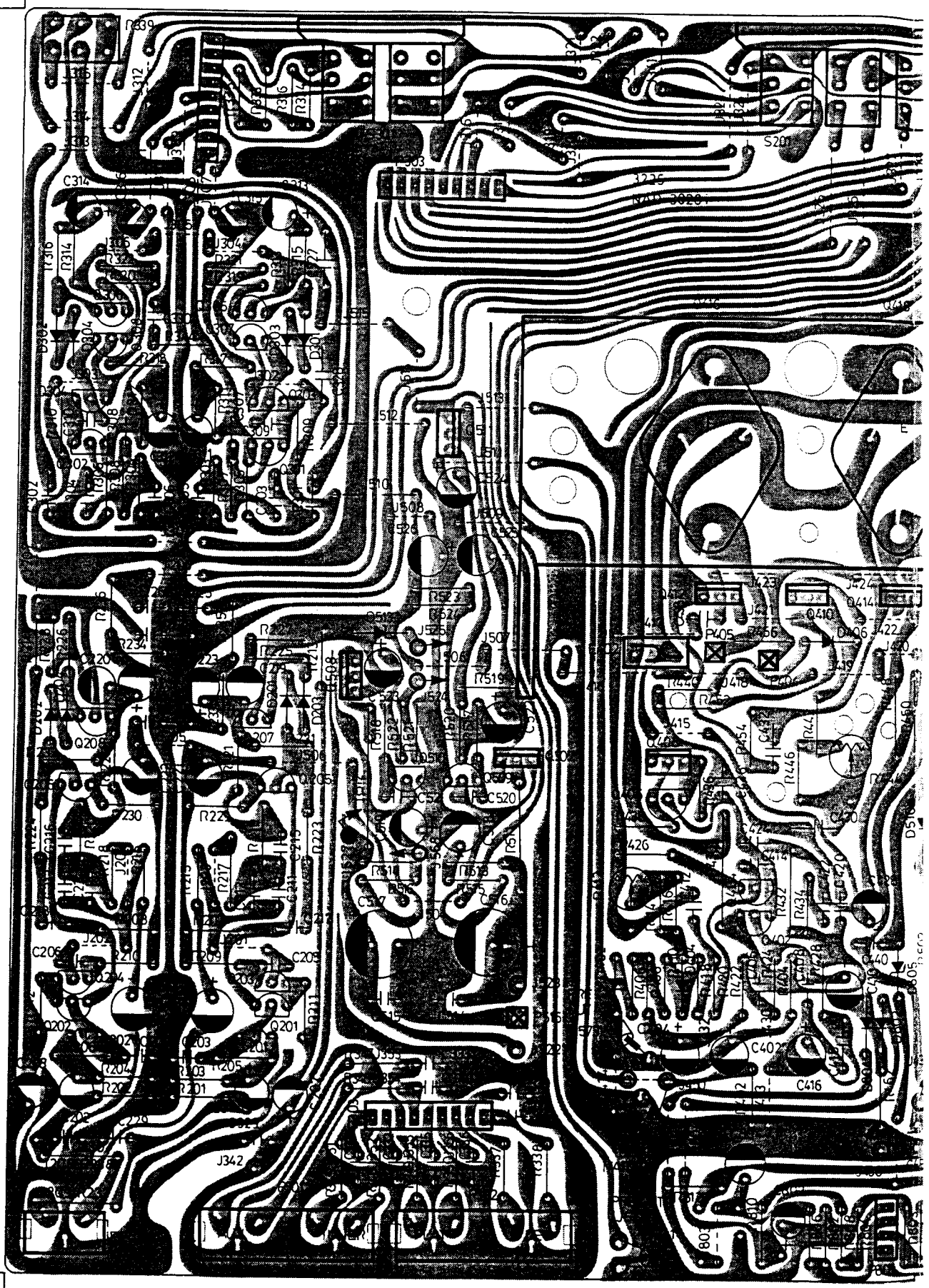

25PE AMPLIFIER PCB LAYOUT

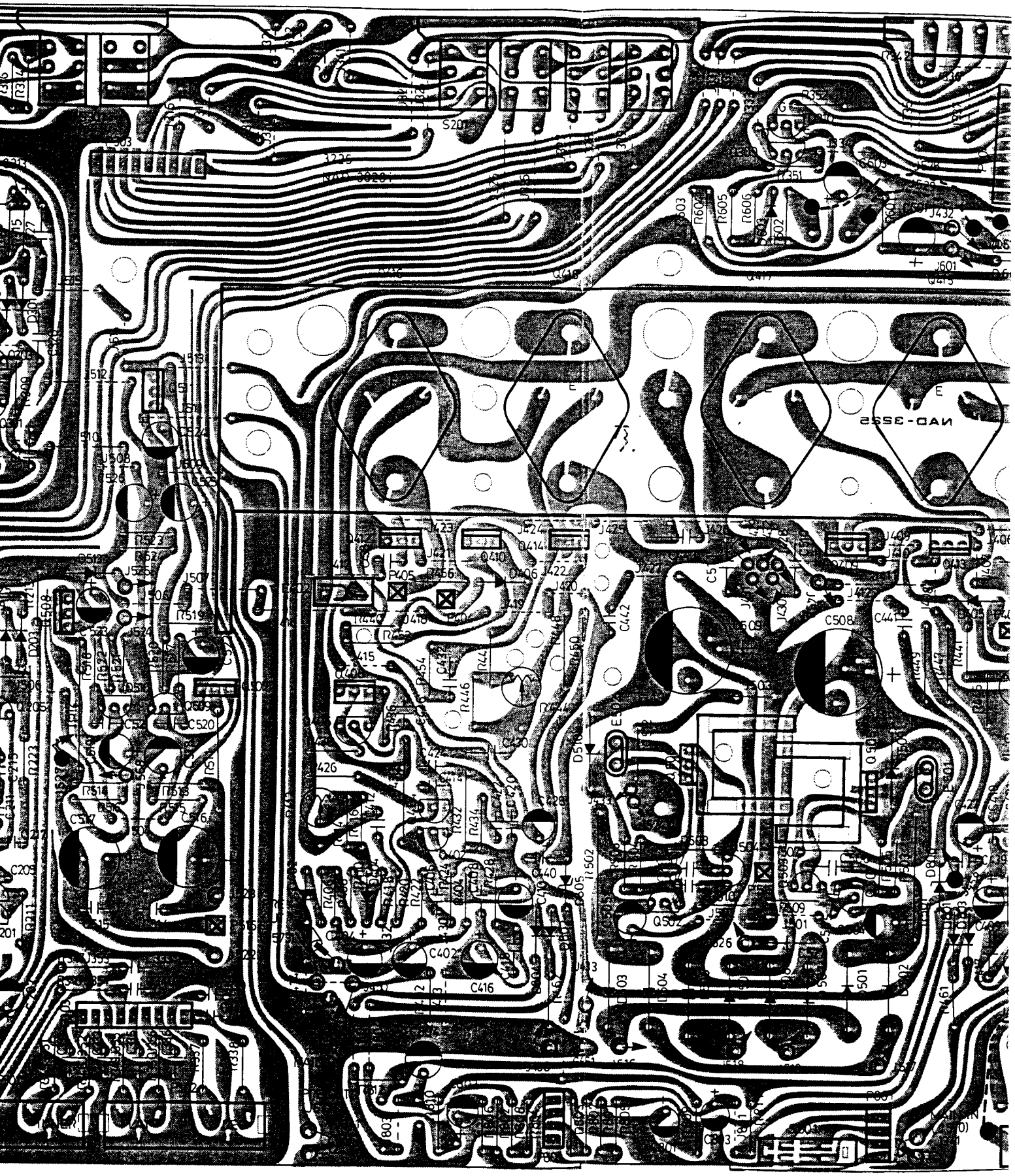

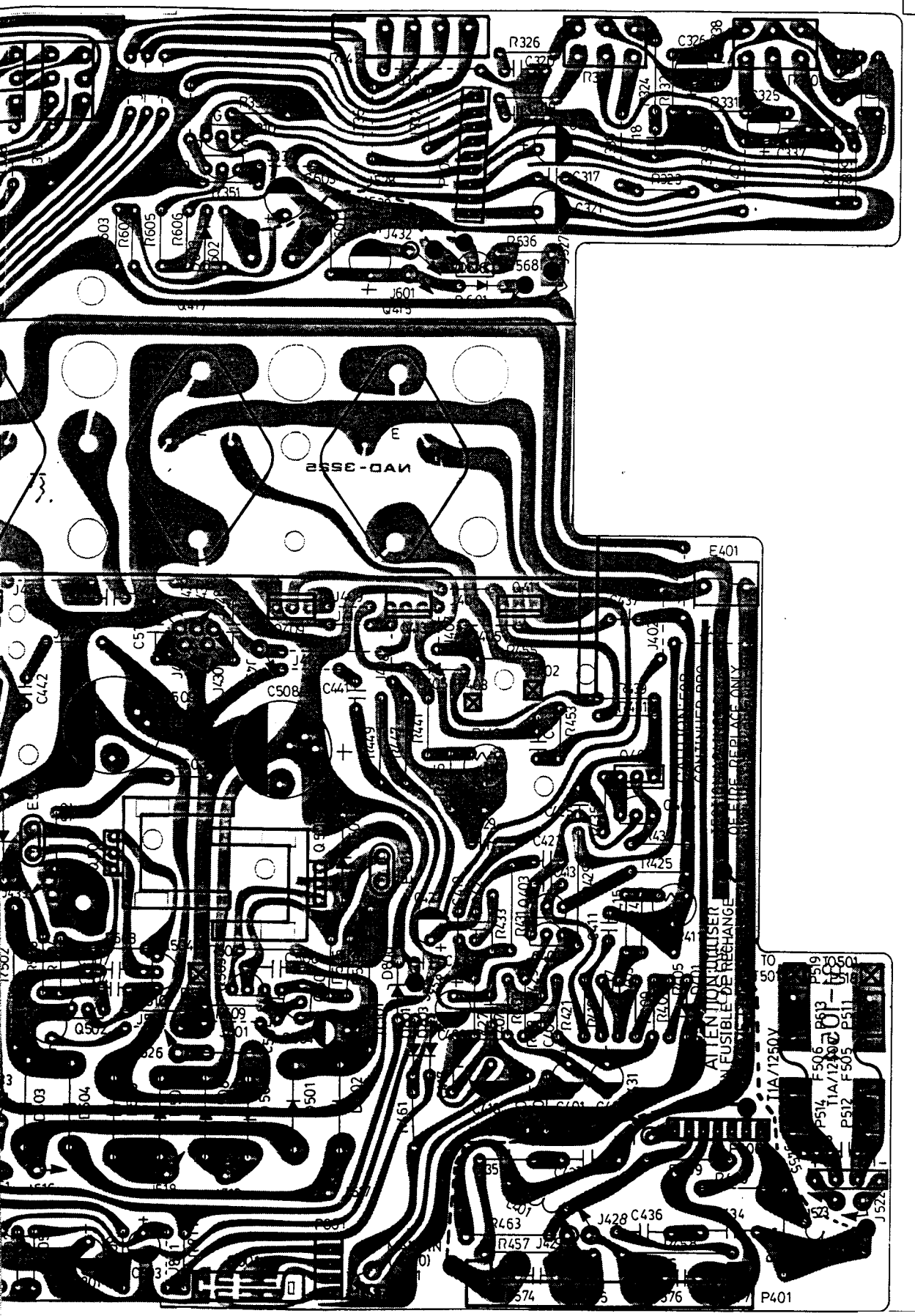
R326
C326
R331
C325
C317
R323
R351
R605
R606
J432
R536
J601
E401
C442
C508
C441
R441
R453
J402
R425
R433
R421
R463
R457
J428
C436
P401
T1A/1250V
F506
F505
P514
P512
P511
P519
P513
ATTENTION UTILISER
FUSIBLE DE RECHANGE
OF FIRE REPLACE ONLY

SCHEMATIC DIAGRAM NAD3225PE AMI

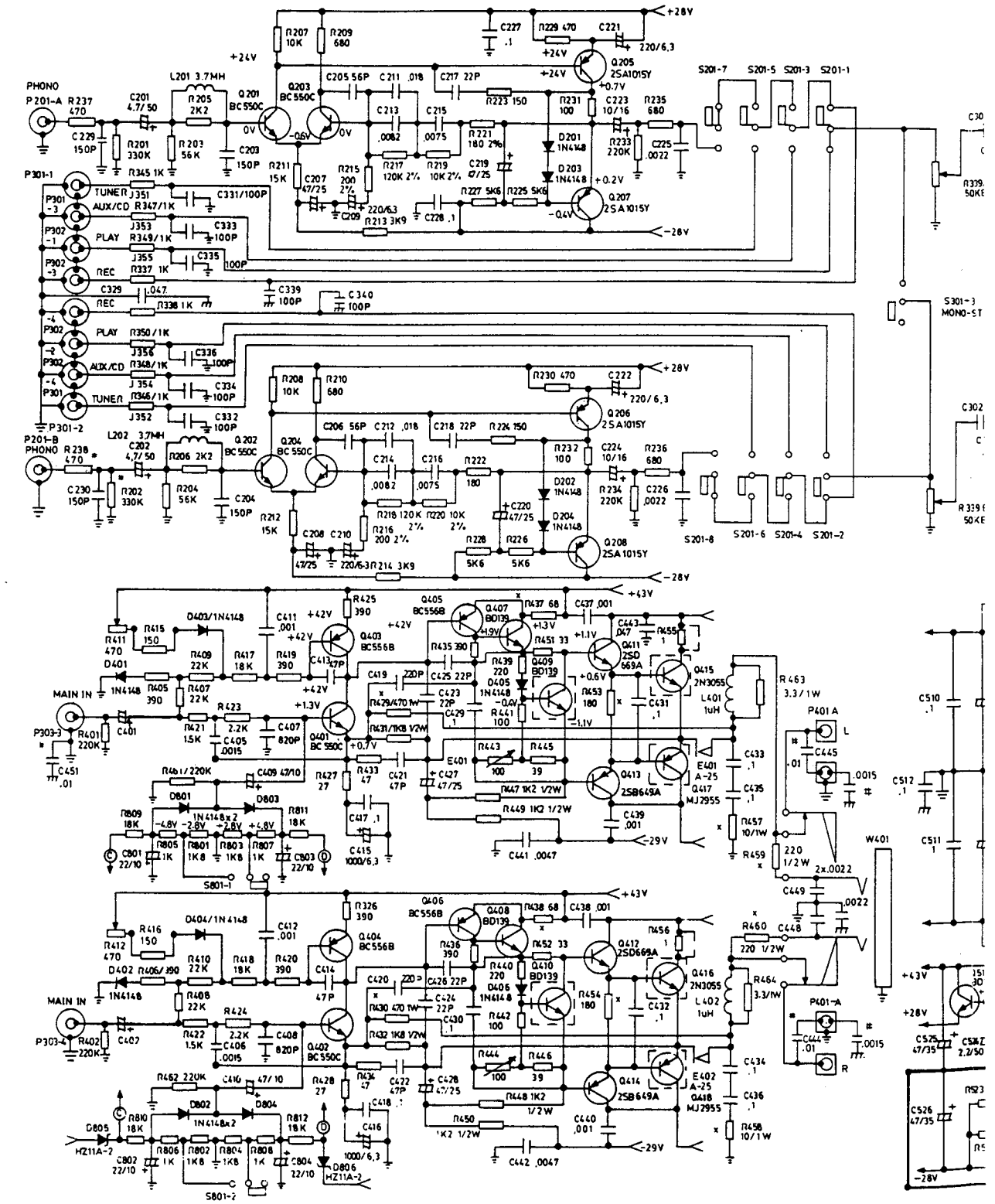

IATIC DIAGRAM NAD3225PE AMPLIFIER

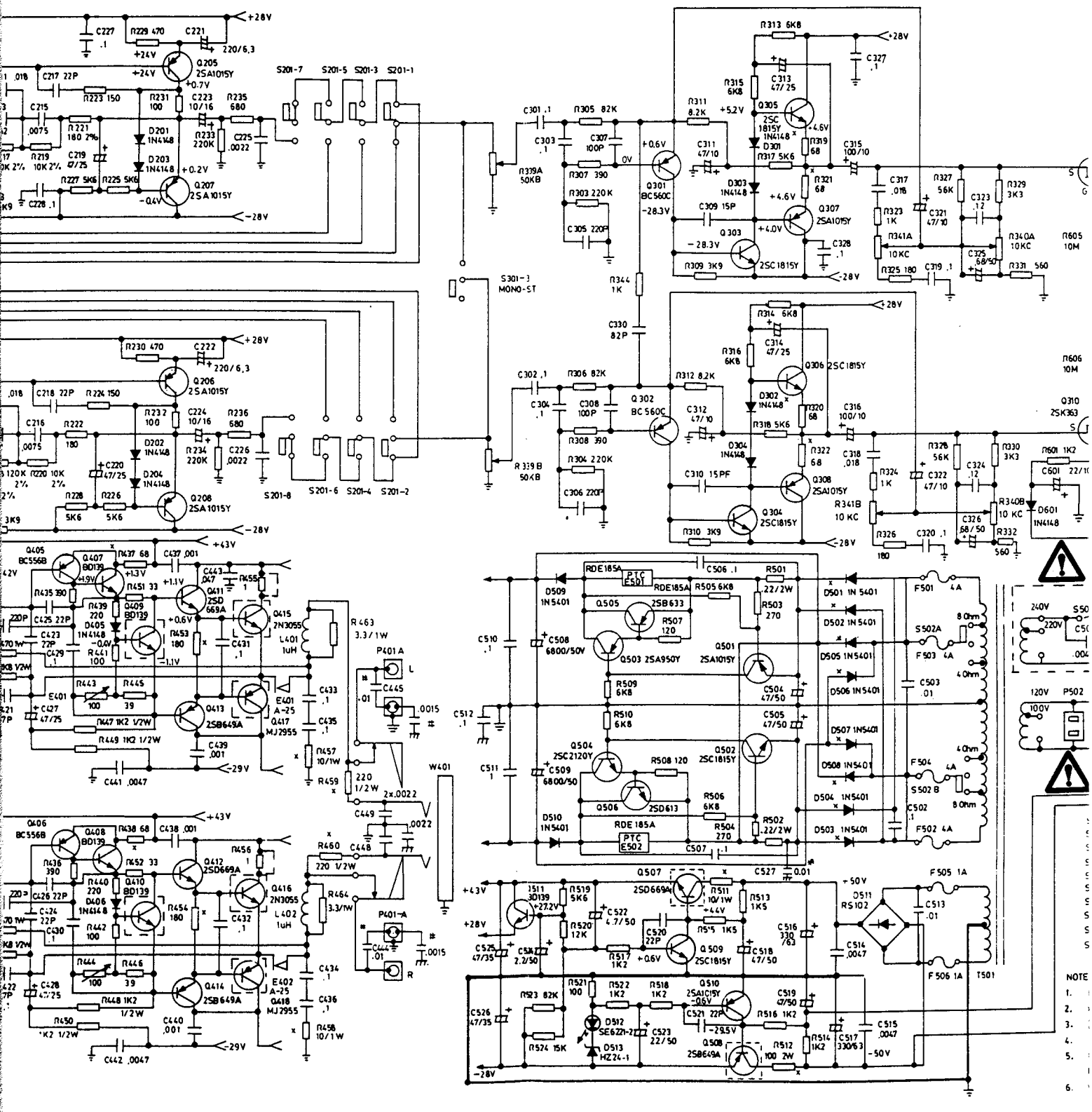

MPLIFIER

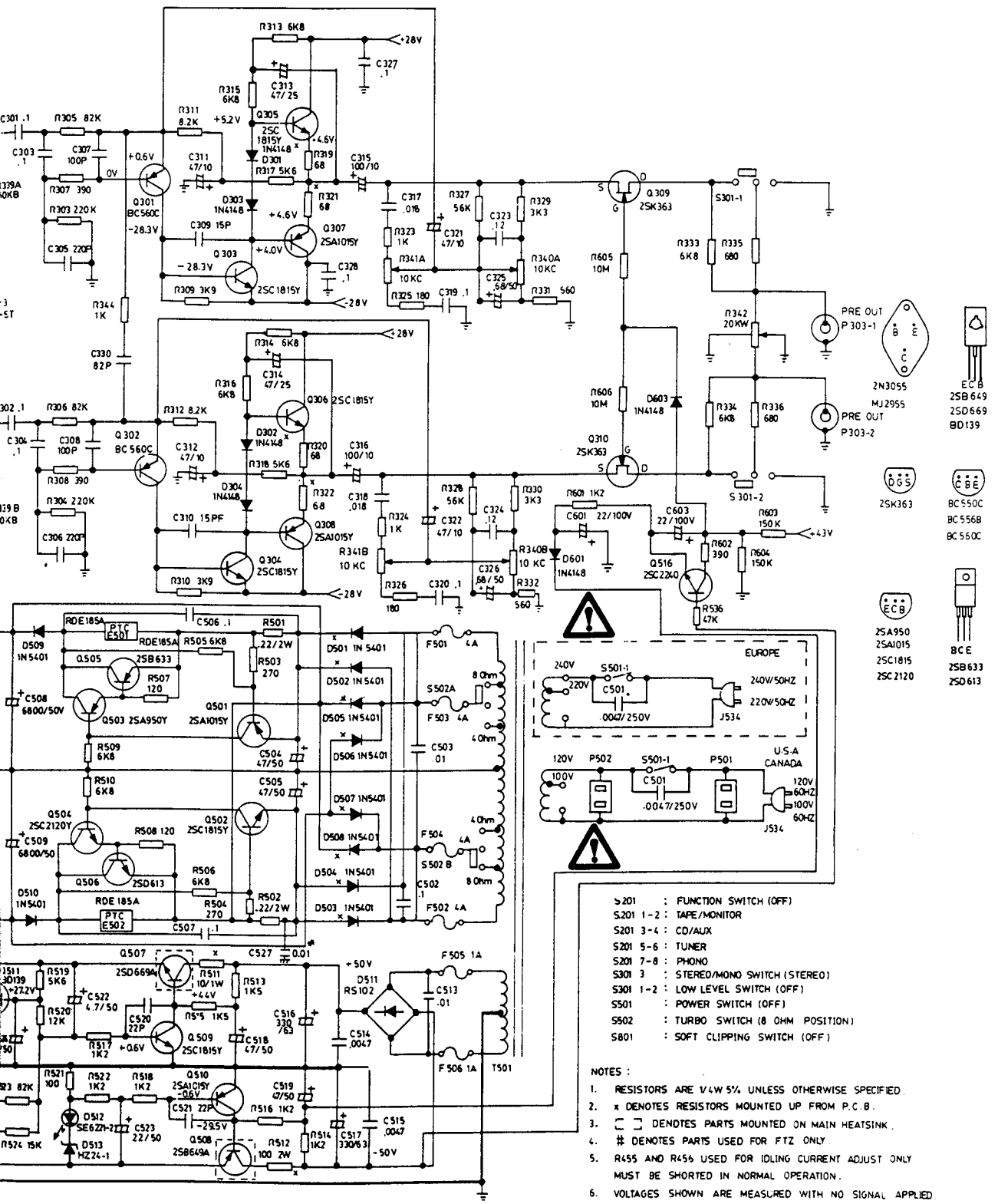

S201 : FUNCTION SWITCH (OFF)
S201 1-2 : TAPE/MONITOR
S201 3-4 : CD/AUX
S201 5-6 : TUNER
S201 7-8 : PHONO
S301 3 : STEREO/MONO SWITCH (STEREO)
S301 1-2 : LOW LEVEL SWITCH (OFF)
S501 : POWER SWITCH (OFF)
S502 : TURBO SWITCH (8 OHM POSITION)
S801 : SOFT CLIPPING SWITCH (OFF)

NOTES :

1. RESISTORS ARE 1/4W 5% UNLESS OTHERWISE SPECIFIED.
2. x DENOTES RESISTORS MOUNTED UP FROM P.C.B.
3. ⊏ ⊐ DENOTES PARTS MOUNTED ON MAIN HEATSINK.
4. # DENOTES PARTS USED FOR FTZ ONLY.
5. R455 AND R456 USED FOR IDLING CURRENT ADJUST ONLY MUST BE SHORTED IN NORMAL OPERATION.
6. VOLTAGES SHOWN ARE MEASURED WITH NO SIGNAL APPLIED.

NAD3020i AMPLIFIER PCB LAYOUT

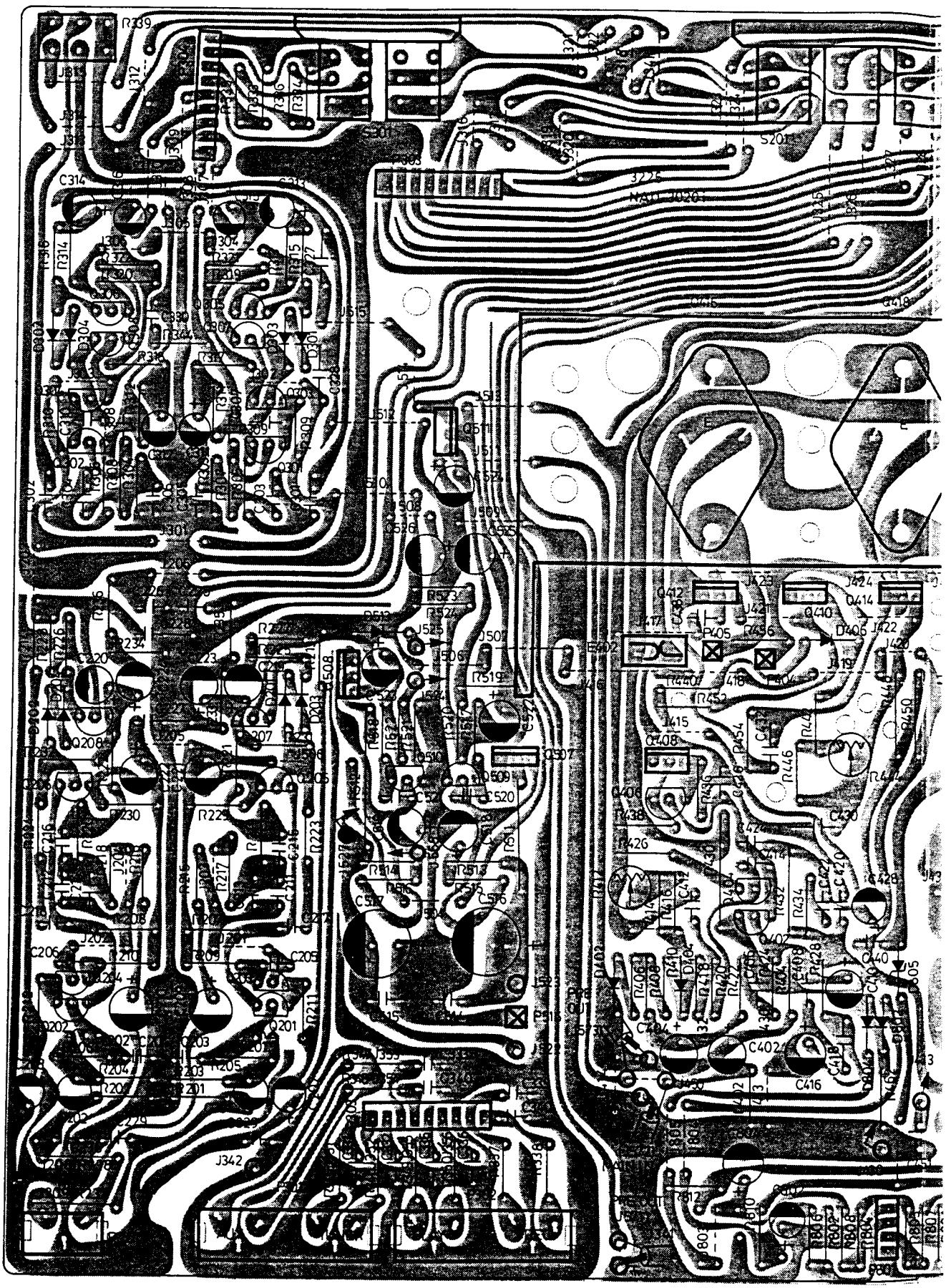

MPLIFIER PCB LAYOUT

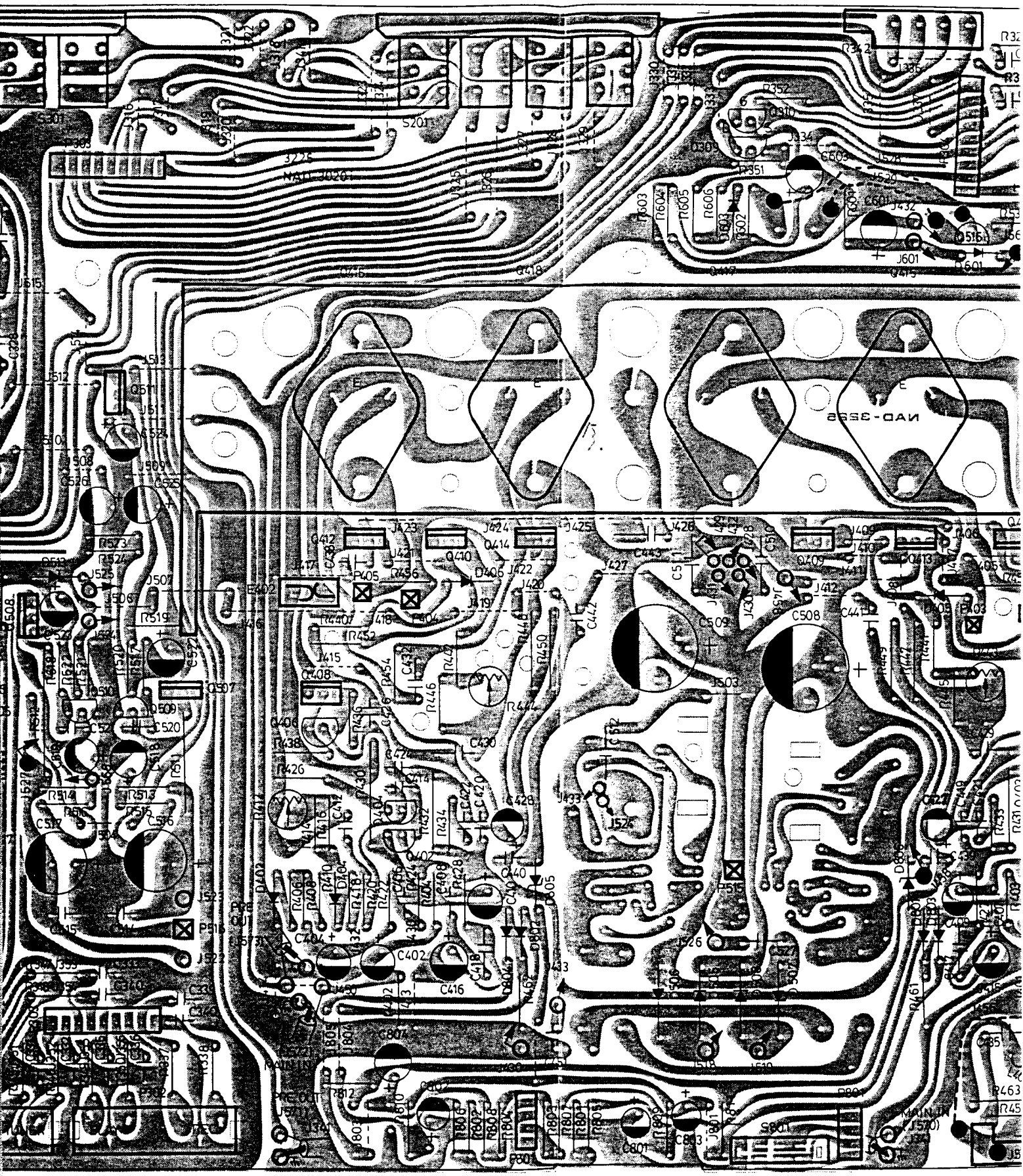

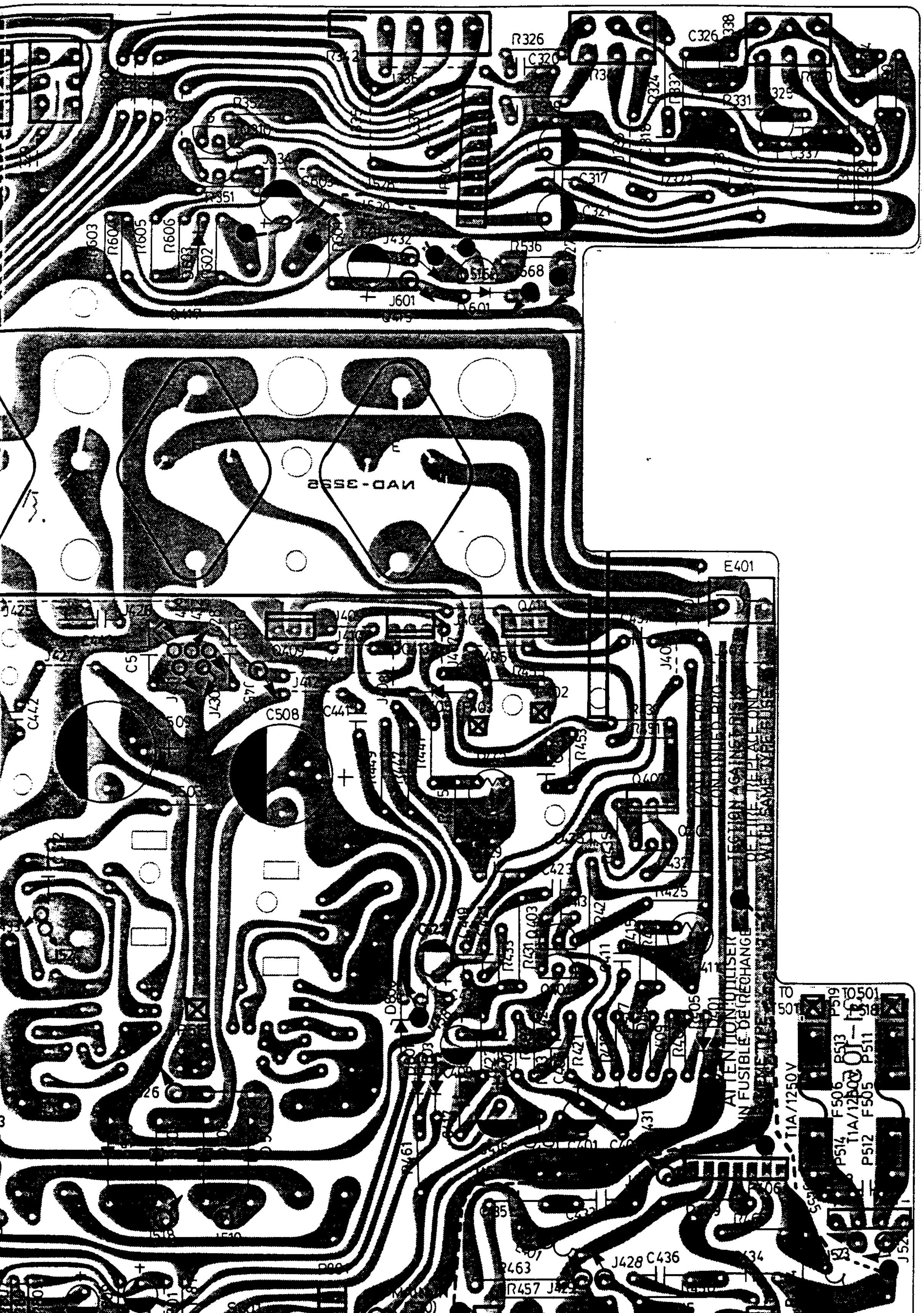

R326
C326
R342
C320
R324
R331
C317
C321
R351
R606
R605
R604
R536
J432
J601
E401
NAD-3225
C508
C441
C442
R453
J427
C423
R425
R433
R421
R461
R463
R457
J428
C436
P401
TO 501
TO 501
P519
P518
P513
P511
F506
F505
T1A/1250V
T1A/1250V
P514
P512
ATTENTION: UTILISER UN FUSIBLE DE RECHANGE

SCHEMATIC DIAGRAM NAD3020i AMPLIFIER

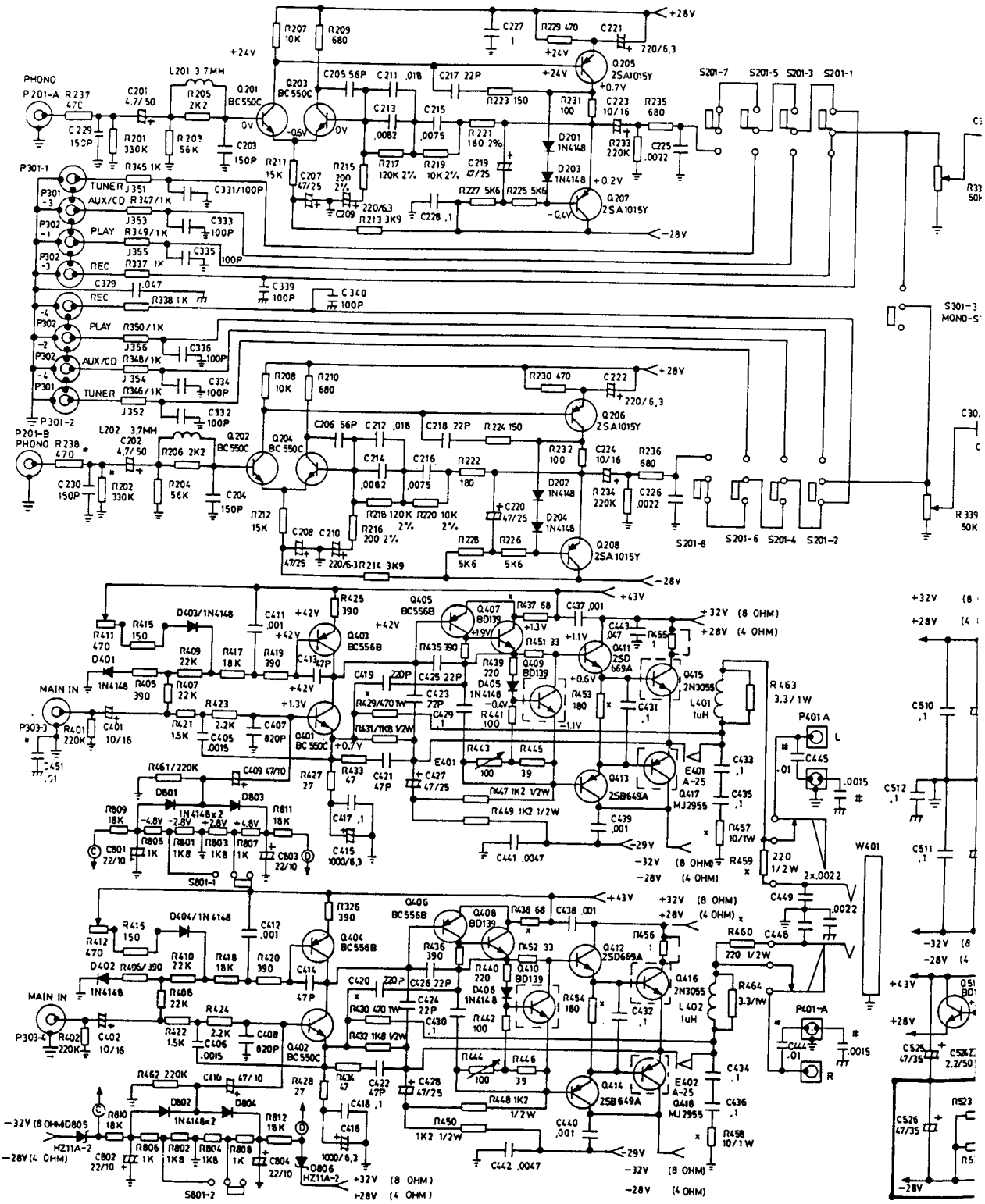

HEMATIC DIAGRAM NAD3020i AMPLIFIER

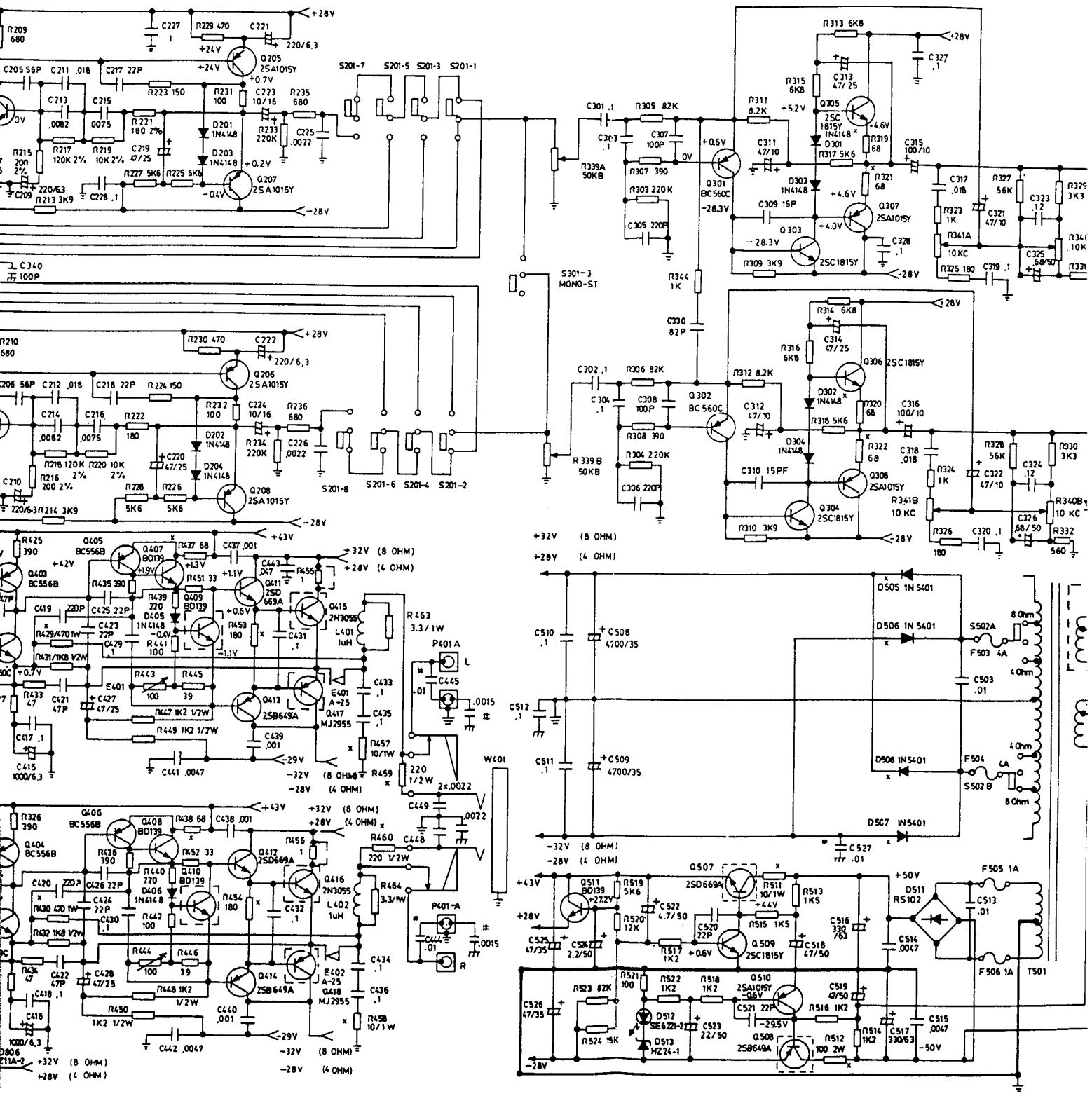

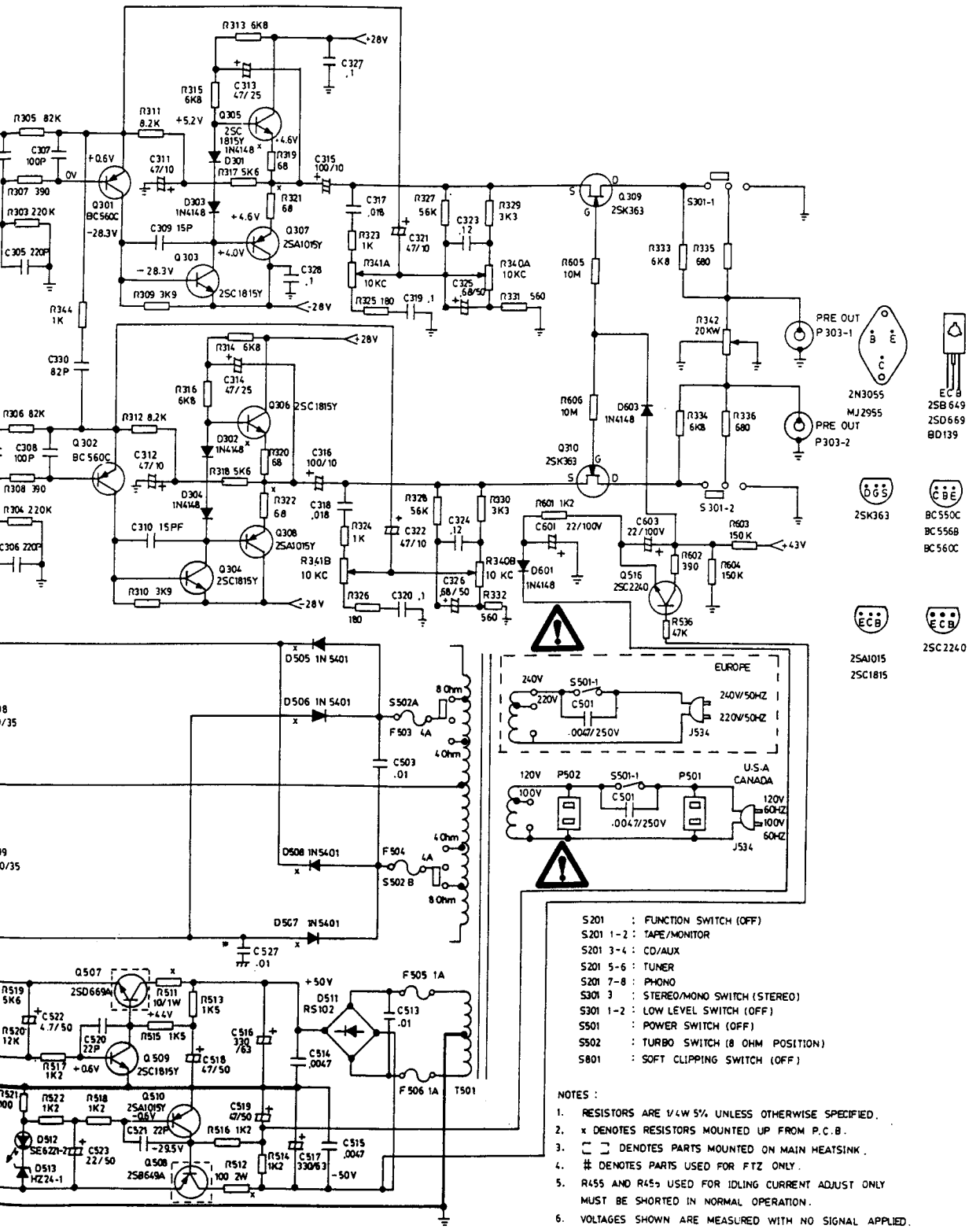

S201 : FUNCTION SWITCH (OFF)
S201 1-2 : TAPE/MONITOR
S201 3-4 : CD/AUX
S201 5-6 : TUNER
S201 7-8 : PHONO
S301 3 : STEREO/MONO SWITCH (STEREO)
S301 1-2 : LOW LEVEL SWITCH (OFF)
S501 : POWER SWITCH (OFF)
S502 : TURBO SWITCH (8 OHM POSITION)
S801 : SOFT CLIPPING SWITCH (OFF)

NOTES :

1. RESISTORS ARE 1/4W 5% UNLESS OTHERWISE SPECIFIED.
2. x DENOTES RESISTORS MOUNTED UP FROM P.C.B.
3. ⊏ ⊐ DENOTES PARTS MOUNTED ON MAIN HEATSINK.
4. # DENOTES PARTS USED FOR FTZ ONLY.
5. R455 AND R452 USED FOR IDLING CURRENT ADJUST ONLY MUST BE SHORTED IN NORMAL OPERATION.
6. VOLTAGES SHOWN ARE MEASURED WITH NO SIGNAL APPLIED.

3225PE/3020i PARTS LIST

SYMBOL	PART NO.	DESCRIPTION				REF.
C201 C202	573-11M7547	Ele. Cap.	4.7uF	+−20%	50V	
C203 C204	571-0J71150	Cer. Cap.	150PF	+−5%	50V	
C205 C206	571-0J70560	Cer. Cap.	56PF	+−5%	50V	
C207 C208	573-11M5647	Ele. Cap.	47uF	+−20%	25V	
C209 C210	573-11M3722	Ele. Cap.	220uF	+−20%	10V	
C211 C212	572-J10318	Mylar Cap.	0.018uF	+−5%	100V	
C213 C214	572-J10282	Mylar Cap.	0.0082uF	+−5%	100V	
C215 C216	572-J10275	Mylar Cap.	0.0075uF	+−5%	100V	
C217 C218	571-0J70220	Cer. Cap.	22PF	+−5%	50V	
C219 C220	573-11M5647	Ele. Cap.	47uF	+−20%	25V	
C221 C222	573-11M3722	Ele. Cap.	220uF	+−20%	10V	
C223 C224	573-11M4610	Ele. Cap.	10uF	+−20%	16V	
C225 C226	572-J10222	Mylar Cap.	0.0022uF	+−5%	100V	
C227 C228	571-0Z74100	Cer. Cap.	0.1uF	+80−20%	50V	
C229 C230	571-0J71150	Cer. Cap.	150PF	+−5%	50V	
C301 C302	572-J10410	Mylar Cap.	0.1uF	+−5%	100V	
C303 C304	572-J10410	Mylar Cap.	0.1uF	+−5%	100V	
C305 C306	571-0J71220	Cer. Cap.	220PF	+−5%	50V	
C307 C308	571-0J71100	Cer. Cap.	100PF	+−5%	50V	
C309 C310	571-0J70150	Cer. Cap.	15PF	+−5%	50V	
C311 C312	573-11M3647	Ele. Cap.	47uF	+−20%	10V	
C313 C314	573-11M5647	Ele. Cap.	47uF	+−20%	25V	
C315 C316	573-11M3710	Ele. Cap.	100uF	+−20%	10V	
C317 C318	572-J10318	Mylar Cap.	0.018uF	+−5%	100V	
C319 C320	572-J10410	Mylar Cap.	0.1uF	+−5%	100V	
C321 C322	573-11M3647	Ele. Cap.	47uF	+−20%	10V	
C323 C324	572-J10412	Mylar Cap.	0.12uF	+−5%	100V	
C325 C326	573-11M7468	Ele. Cap.	0.68uF	+−20%	50V	
C327 C328	571-0Z74100	Cer. Cap.	0.1uF	+80−20%	50V	
C329 C443	571-0Z73470	Cer. Cap.	0.047uF	+80−20%	50V	
C330	571-0K70820	Cer. Cap.	82PF	+−10%	50V	
C331 C332	571-0J71100	Cer. Cap.	100PF	+−5%	50V	
C333 C334	571-0J71100	Cer. Cap.	100PF	+−5%	50V	
C335 C336	571-0J71100	Cer. Cap.	100PF	+−5%	50V	
C339 C340	571-0J71100	Cer. Cap	100PF	+−5%	50V	
C401 C402	573-11M4610	Ele. Cap	10uF	+−20%	16V	
C405 C406	572-J10215	Mylar Cap.	0.0015uF	+−5%	100V	
C407 C408	571-0J71820	Cer. Cap.	820PF	+−5%	50V	
C409 C410	573-11M3647	Ele. Cap.	47uF	+−20%	10V	
C411 C412	572-J10210	Mylar Cap.	0.001uF	+−5%	50V	
C413 C414	571-0J70470	Cer. Cap.	47PF	+−5%	50V	
C415 C416	573-11M3810	Ele. Cap.	1000uF	+−20%	10V	
C417 C418	571-0Z74100	Cer. Cap.	0.1uF	+80−20%	50V	
C419 C420	571-0J71220	Cer. Cap.	220PF	+−5%	50V	
C421 C422	571-0J70470	Cer. Cap.	47PF	+−5%	50V	
C423 C424	571-0J70220	Cer. Cap.	22PF	+−5%	50V	
C425 C426	571-0J70220	Cer. Cap.	22PF	+−5%	50V	
C427 C428	573-11M5647	Ele. Cap.	47uF	+−20%	25V	
C429 C430	572-J10410	Mylar Cap.	0.1uF	+−5%	100V	
C431 C432	572-J10410	Mylar Cap.	0.1uF	+−5%	100V	
C433 C434	571-0Z74100	Cer. Cap.	0.1uF	+80−20%	50V	
C436 C436	571-0Z74100	Cer. Cap.	0.1uF	+80−20%	50V	
C437 C438	571-0M72100	Cer. Cap.	0.001uF	+−20%	50V	
C439 C440	571-0M72100	Cer. Cap.	0.001uF	+−20%	50V	
C441 C442	571-0K72500	Cer. Cap.	0.005uF	+−10%	50V	
C444 C445	571-0K73100	Cer. Cap.	0.01uF	+−10%	50V	
C446 C447	571-0J72150	Cer. Cap.	0.0015uF	+−5%	50V	
C448 C449	571-0J72220	Cer. Cap.	0.0022uF	+−5%	50V	
C450	571-0J72220	Cer. Cap.	0.0022uF	+−5%	50V	
C451 C527	571-0K73100	Cer. Cap.	0.01uF	+−10%	50V	
C501	571-0ME2470	Cer. Cap.	0.0047uF	+−20%	400V	
C502 C503	572-M50310	Mylar Cap.	0.01uF	+−5%	500V	
C504 C505	573-11M7647	Ele. Cap.	47uF	+−20%	50V	3225
C506 C507	571-0Z74100	Cer. Cap.	0.1uF	+80−20%	50V	3225
C508 C509	573-11M6847	Ele. Cap.	4700uF	+−20%	35V	3020
C508 C509	573-11T7868	Ele. Cap.	6800uF	+50−10%	50V	3225
C510 C511	571-0Z74100	Cer. Cap.	0.1uF	+80−20%	50V	
C512	571-0Z74100	Cer. Cap.	0.1uF	+80−20%	50V	
C513	572-M50310	Mylar Cap.	0.01uF	+−5%	500V	
C514 C515	571-0K72500	Cer. Cap.	0.005uF	+−10%	50V	
C516 C517	573-11M8733	Cer. Cap.	330uF	+−20%	63V	
C518 C519	573-11M7647	Ele. Cap.	47uF	+−20%	50V	
C520 C521	571-0J70220	Cer. Cap.	22PF	+−5%	50V	
C522	573-11M7547	Ele. Cap.	4.7uF	+−20%	50V	
C523	573-11M7622	Ele. Cap.	22uF	+−20%	50V	
C524	573-11M7522	Ele. Cap.	2.2uF	+−20%	50V	
C525	573-11M7647	Ele. Cap.	47uF	+−20%	50V	
C526	573-11M6647	Ele. Cap.	47uF	+−20%	35V	
C601 C603	573-11MA622	Ele. Cap.	22uF	+−20%	100V	
C801 C802	573-11M4622	Ele. Cap.	22uF	+−20%	16V	
C803 C804	573-11M4622	Ele. Cap.	22uF	+−20%	16V	
D201 D202	501-21N4148	Diode	1N4148			
D203 D204	501-21N4148	Diode	1N4148			
D301 D302	501-21N4148	Diode	1N4148			
D303 D304	501-21N4148	Diode	1N4148			
D401 D402	501-21N4148	Diode	1N4148			
D403 D404	501-21N4148	Diode	1N4148			
D405 D406	501-21N4148	Diode	1N4148			
D501 D502	501-11N5401	Diode	1N5401	3A	100V	3225
D503 D504	501-11N5401	Diode	1N5401	3A	100V	3225
D505 D506	501-11N5401	Diode	1N5401	3A	100V	
D507 D508	501-11N5401	Diode	1N5401	3A	100V	
D509 D510	501-11N5401	Diode	1N5401	3A	100V	3225
D511	501-7RS102	Diode	100V	1A		
D512	502-1R2551	LED	TLG208	Green		
D513	501-40240-005	Zener	24V	0.5W		
D601 D603	501-21N4148	Diode	1N4148			
D801 D802	501-21N4148	Diode	1N4148			
D803 D804	501-21N4148	Diode	1N4148			
D805 D806	501-40110-005	Zener	11V	0.5W		
E401 E402	530-25600-B	Breaker	2.5A			3020
E401 E402	530-35400-B	Breaker	3.5A			3225
E501 E502	549-21851	PTC	1.85A			3225
F501 F502	530-4041B	Fuse	4A/250V		Semko	B/B1/C/C1
F501 F502	530-4051A	Fuse	4A/125V		UL/CSA	3225 A/A1
F503 F504	530-4041B	Fuse	4A/250V		Semko	3225 B/B1/C/C1
F503 F504	530-4051A	Fuse	4A/125V		UL/CSA	A/A1
F505 F506	530-1041	Fuse	1A/250V		Semko	B/B1/C/C1
F505 F506	530-1051A	Fuse	1A/250V		UL/CSA	A/A1
J534	529-51A01	AC Cord			UL/CSA	A/A1
J534	529-53B01	AC Cord			BS	B
J534	529-53M01	AC Cord			Emko	C/C1
J534	529-53S01	AC Cord			SAA	B1
L201 L202	524-8372231	Coil	3.7 mH	+−20%		
L401 L402	524-108051	Coil	1uH			
P201	527-421201	Jack Signal	2P	Gold Plated		
P301 P302	527-441101	Jack Signal	4P			
P303	527-441101	Jack Signal	4P			
P303	563-1260922	Ribon Connector		220mm	9P	
P304	563-1260933	Ribon Connector		330mm	9P	
P406	563-1240727	Ribon Connector		270mm	7P	
P501 P502	527-3125U	AC Outlet				
P503 P504	538-0520	Fuse Clip				A/A1
P505 P506	538-0520	Fuse Clip				3225
P507 P508	538-0520	Fuse Clip				3225
P509 P510	538-0520	Fuse Clip				
P511 P512	538-0520	Fuse Clip				
P513 P514	538-0520	Fuse Clip				
P515 P516	527-5011	Pin				
	527-6002	Bushing	Power			
P518 P519	527-5100	Pin				
P801	563-1260412	Ribon Connector		120mm	4P	
Q201 Q202	517-BC550C	Tr	BC550C			
Q203 Q204	517-BC550C	Tr.	BC550C			
Q205 Q206	517-2SA1015Y	Tr.	2SA1015Y			
Q207 Q208	517-2SA1015Y	Tr.	2SA1015Y			
Q301 Q302	517-BC560C	Tr.	BC560C			

SYMBOL	PART NO.	DESCRIPTION				REF.
Q303 Q304	517-2SC1815Y	Tr.	2SC1815Y			
Q305 Q306	517-2SC1815Y	Tr.	2SC1815Y			
Q307 Q308	517-2SA1015Y	Tr.	2SA1015Y			
Q309 Q310	517-2SK363BL	Tr.	2SK363BL			
Q401 Q402	517-BC550C	Tr.	BC550C			
Q403 Q404	517-BC556B	Tr.	BC556B			
Q405 Q406	517-BC556B	Tr.	BC556B			
Q407 Q408	517-BD139-10	Tr.	BD139-10			
Q409 Q410	517-BD139-10	Tr.	BD139-10			
Q411 Q412	517-2SD669AC	Tr.	2SD669AC			
Q413 Q414	517-2SB649A-C	Tr.	2SB649A-C			
Q415 Q416	517-2N3055	Tr.	2N3055			
Q417 Q418	517-MJ2955	Tr.	MJ2955			
Q501	517-2SA1015Y	Tr.	2SA1015Y			3225
Q502	517-2SC1815Y	Tr.	2SC1815Y			3225
Q503	517-2SA950Y	Tr.	2SA950Y			3225
Q504	517-2SC2120Y	Tr.	2SC2120Y			3225
Q505	517-2SB633D	Tr.	2SB633D			3225
Q506	517-2SD613D	Tr.	2SD613D			3225
Q507	517-2SD669AC	Tr.	2SD669AC			
Q508	517-2SB649A-C	Tr.	2SB649A-C			
Q509	517-2SC1815Y	Tr.	2SC1815Y			
Q510	517-2SA1015Y	Tr.	2SA1015Y			
Q511	517-BD139-10	Tr.	BD139-10			
Q516	517-2SC2240GR	Tr.	2SC2240GR			
R201 R202	704-13J5330	Res. Carb.	330K	1/4W	+−5%	
R203 R204	704-13J4560	Res. Carb.	56K	1/4W	+−5%	
R205 R206	704-13J3220	Res. Carb.	2.2K	1/4W	+−5%	
R207 R208	704-13J4100	Res. Carb.	10K	1/4W	+−5%	
R209 R210	704-13J2680	Res. Carb.	680	1/4W	+−5%	
R211 R212	704-13J4150	Res. Carb.	15K	1/4W	+−5%	
R213 R214	704-13J3390	Res. Carb.	3.9K	1/4W	+−5%	
R215 R216	704-13G2200	Res. Carb.	200	1/4W	+−2%	
R217 R218	704-13G5120	Res. Carb.	120K	1/4W	+−2%	
R219 R220	704-13G4120	Res. Carb.	10K	1/4W	+−2%	
R221 R222	704-13G2180	Res. Carb.	180	1/4W	+−2%	
R223 R224	704-13J2150	Res. Carb.	150	1/4W	+−5%	
R225 R226	704-13J3560	Res. Carb.	5.6K	1/4W	+−5%	
R227 R228	704-13J3560	Res. Carb.	5.6K	1/4W	+−5%	
R229 R230	704-13J2470	Res. Carb.	470	1/4W	+−5%	
R231 R232	704-13J2100	Res. Carb.	100	1/4W	+−5%	
R233 R234	704-13J5220	Res. Carb.	220K	1/4W	+−5%	
R235 R236	704-13J2680	Res. Carb.	680	1/4W	+−5%	
R237 R238	704-13J2470	Res. Carb.	470	1/4W	+−5%	
R303 R304	704-13J5220	Res. Carb.	220K	1/4W	+−5%	
R305 R306	704-13J4820	Res. Carb.	82K	1/4W	+−5%	
R307 R308	704-13J2390	Res. Carb.	390	1/4W	+−5%	
R309 R310	704-13J3390	Res. Carb.	3.9K	1/4W	+−5%	
R311 R312	704-13J3820	Res. Carb.	8.2K	1/4W	+−5%	
R313 R314	704-13J3680	Res. Carb.	6.8K	1/4W	+−5%	
R315 R316	704-13J3680	Res. Carb.	6.8K	1/4W	+−5%	
R317 R318	704-13J3560	Res. Carb.	5.6K	1/4W	+−5%	
R319 R320	704-13J1680	Res. Carb.	68	1/4W	+−5%	
R321 R322	704-13J1680	Res. Carb.	68	1/4W	+−5%	
R323 R324	704-13J3100	Res. Carb.	1K	1/4W	+−5%	
R325 R326	704-13J2180	Res. Carb.	180	1/4W	+−5%	
R327 R328	704-13J4560	Res. Carb.	56K	1/4W	+−5%	
R329 R330	704-13J3330	Res. Carb.	3.3K	1/4W	+−5%	
R331 R332	704-13J2560	Res. Carb.	560	1/4W	+−5%	
R333 R334	704-13J3680	Res. Carb.	6.8K	1/4W	+−5%	
R335 R336	704-13J2680	Res. Carb.	680	1/4W	+−5%	
R337 R338	704-13J3100	Res. Carb.	1K	1/4W	+−5%	
R339	507-3503B21	Res. VR	50KB x 2			
R340 R341	507-3103C21	Res. VR	10KC x 2			
R342	507-3203W11-T	Res. VR	20KW			
R345 R346	704-13J3100	Res. Carb.	1K	1/4W	+−5%	
R347 R348	704-13J3100	Res. Carb.	1K	1/4W	+−5%	
R349 R350	704-13J3100	Res. Carb.	1K	1/4W	+−5%	
R401 R402	704-13J5220	Res. Carb.	220K	1/4W	+−5%	
R405 R406	704-13J2390	Res. Carb.	390	1/4W	+−5%	
R407 R408	704-13J4220	Res. Carb.	22K	1/4W	+−5%	
R409 R410	704-13J4220	Res. Carb.	22K	1/4W	+−5%	
R411 R412	508-A004	Res. SVR	470			
R415 R416	704-13J2150	Res. Carb.	150	1/4W	+−5%	
R417 R418	704-13J4180	Res. Carb.	18K	1/4W	+−5%	
R419 R420	704-13J2390	Res. Carb.	390	1/4W	+−5%	
R421 R422	704-13J3150	Res. Carb.	1.5K	1/4W	+−5%	
R423 R424	704-13J3220	Res. Carb.	2.2K	1/4W	+−5%	
R425 R426	704-13J2390	Res. Carb.	390	1/4W	+−5%	
R427 R428	704-13J1270	Res. Carb.	27	1/4W	+−5%	
R429 R430	705-15J2470	Res. MOF	470	1W	+−5%	
R431 R432	704-14J3180	Res. Carb.	1.8K	1/2W	+−5%	
R433 R434	704-13J1470	Res. Carb.	47	1/4W	+−5%	
R435 R436	704-13J2390	Res. Carb.	390	1/4W	+−5%	
R437 R438	704-13J1680	Res. Carb.	68	1/4W	+−5%	
R439 R440	704-13J2220	Res. Carb.	220	1/4W	+−5%	
R441 R442	704-13J2100	Res. Carb.	100	1/4W	+−5%	
R443 R444	508-A003	Res. SVR.	100			
R445 R446	704-13J1390	Res. Carb.	39	1/4W	+−5%	
R447 R448	704-14J3120	Res. Carb.	1.2K	1/2W	+−5%	
R449 R450	704-14J3120	Res. Carb.	1.2K	1/2W	+−5%	
R451 R452	704-13J1330	Res. Carb.	33	1/4W	+−5%	
R453 R454	704-13J2180	Res. Carb.	180	1/4W	+−5%	
R455 R456	704-13J0100	Res. Carb.	1	1/4W	+−5%	
R457 R458	705-15J1100	Res. MOF	10	1W	+−5%	
R459 R460	704-14J2220	Res. Carb.	220	1/2W	+−5%	
R461 R462	704-13J5220	Res. Carb.	220K	1/4W	+−5%	
R463 R464	704-15J0330	Res. Carb.	3.3	1W	+−5%	
R501 R502	705-16J0022	Res. MOF	0.22	2W	+−5%	3225
R503 R504	704-13J2270	Res. Carb.	270	1/4W	+−5%	3225
R505 R506	704-13J3680	Res. Carb.	6.8K	1/4W	+−5%	3225
R507 R508	704-13J2120	Res. Carb.	120	1/4W	+−5%	3225
R509 R510	704-13J3680	Res. Carb.	6.8K	1/4W	+−5%	3225
R511	705-15J1100	Res. MOF	10	1W	+−5%	
R512	705-16J2100	Res. MOF	100	2W	+−5%	
R513 R515	704-13J3150	Res. Carb.	1.5K	1/4W	+−5%	
R514 R516	704-13J3120	Res. Carb.	1.2K	1/4W	+−5%	
R517 R518	704-13J3120	Res. Carb.	1.2K	1/4W	+−5%	
R519	704-13J3560	Res. Carb.	5.6K	1/4W	+−5%	
R520	704-13J4120	Res. Carb.	12K	1/4W	+−5%	
R521	704-13J2100	Res. Carb.	100	1/4W	+−5%	
R522 R601	704-13J3120	Res. Carb.	1.2K	1/4W	+−5%	
R523	704-13J4820	Res. Carb.	82K	1/4W	+−5%	
R524	704-13J4150	Res. Carb.	15K	1/4W	+−5%	
R536	704-13J4470	Res. Carb.	47K	1/4W	+−5%	
R602	704-13J2390	Res. Carb.	390	1/4W	+−5%	
R603 R604	704-13J5150	Res. Carb.	150K	1/4W	+−5%	
R605 R606	704-13J7100	Res. Carb.	10M	1/4W	+−5%	
R801 R802	704-13J3180	Res. Carb.	1.8K	1/4W	+−5%	
R803 R804	704-13J3180	Res. Carb.	1.8K	1/4W	+−5%	
R805 R806	704-13J3100	Res. Carb.	1K	1/4W	+−5%	
R807 R808	704-13J3100	Res. Carb.	1K	1/4W	+−5%	
R809 R810	704-13J4180	Res. Carb.	18K	1/4W	+−5%	
R811 R812	704-13J4180	Res. Carb.	18K	1/4W	+−5%	
S201	526-3102	SW Push	4P			
S301	526-3103	SW Push	2P			
S501	526-3110-1	SW Power				
S502	526-3105	SW Slide	2P2T			
S801	526-52205	SW Slide	2P2T			
W401	527-4020	Jack Headphone				

3225PE/3020i EXPLODED VIEW PARTS

ITEM	PARTS NO.	DESCRIPTION	QTY
1.	055-131A	Panel — Front	1
2.	073-1620	Button — Push	6
3.	073-1625	Button — Push (Power)	1
4.	081-1100	Knob — Volume	1
5.	081-1110	Knob — Control	3
6.	049-069A	Cover — Top	1
7.	049-0700	Cover — Bottom	1
8.	078-8120	Bracket — Middle	1
9.	078-8130	Bracket — Tuner PCB	2
10.	080-2090	Supporter — Circuit Board	3
11.	082-4490	Felt — Volume Knob	1
12.	082-4500	Felt — Control Knob	3
13.	082-4510	Rubber — Foot	4
14.	083-0710	Heat Sink	1
15.	083-0720	Heat Sink (S)	2
16.	085-1350	Thumb Screw Stud	1
17.	085-1360	Bar — Shorting	2
18.	095-7070	Plate — Left	1
19.	095-7080	Plate — Right	1
20.	095-7090	Plate — Front	1
21.	095-710E	Plate — Back (220V 50Hz 140W)	1
22.	095-7110	Plate — Switch	1
23.	095-7130	Plate — Terminal Board Cover	1
24.	099-0760	UL Heat Shrinkable Tube	0.03
25.	099-0770	UL Heat Shrinkable Tube	0.11
26.	099-0850	Loudspeaker Terminal Block	1
27.	527-060	Cable Tie 4"	8
28.	527-6002	Micro Bushing 4N40	1
29.	027-5000	Soldering Tag	2
30.	526-3110-1	Push Buttom Switch	1
31.	048-0620	Nut — 3.5mm	1
32.	093-3008BTBB(H)	Self-Tapping Screw 3 x 8 BTBB	
33.	571-0ME2470	Ceramic Capacitor	1
34.	093-3006BTBB(H)	Self-Tapping Screw 3 x 6 BTBB	1
35.	093-3006BTB	Self-Tapping Screw 3 x 6 BTB	8
36.	093-3008BH	Machine Screw M 3 x 0.5P x 8 BH	6
37.	093-3008BTBB	Self-Tapping Screw 3 x 8 BTBB	4
38.	093-3008KTB(H)	Self-Tapping Screw 3 x 8 KTB	3
39.	094-0740	Washer — Metal	1
40.	094-0760	Washer — External Tooth	1
41.	093-4006WHB(H)	Machine Screw M 4 x 0.7P x 6 WHB	2
42.	099-1100	Rivet	4
43.	529-51A01	AC Cord uL/CSA	1
	529-53B01	AC Cord BS	1
	529-53M01	AC Cord VDE/EMKO	1
	529-53S01	AC Cord SAA	1
44.	082-4020	Cushion	
45.	531-1054	Main Board	1
46.	531-9016	Headphone Board	1
47.	531-9015	Ext. Speaker Board	1
48.	531-2201	Ext. Pre-Amp Board	1
49.	531-V001	Fuse Board	1
50.	521-167AMV501	Power Transformer EI 67 x 55 mm	1
51.	527-4020	Headphone Jack 6.5mm	1
52.	507-3103C21	Volume 10K C (D) W/O Switch	2
53.	507-3203W11-T	Volume 20K W (S) W/O Switch	1
54.	526-3102	Push Switch 2I2I2IS (SPUF41) Alps	1
55.	526-3103	Push Switch 2S2S (SPUF21) Alps	1
56.	507-3503B21	Volume 50K B (D) W/O Switch	1
57.	526-52205	Slide Switch 2P2T	1
58.	527-441101	RCA Jack 4 Pos	1
59.	527-441101	RCA Jack 4 Pos	2
60.	527-421201	RCA Jack 2 Pos	1
61.	531-U001	Terminal Board	1
62.	531-7049	Power LED Board	1
63.	094-0190	Washer — Ext. Tooth	16
64.	027-6003	Soldering Tag	1
65.	526-3105	Slide Switch 2P2T RG 10mm	1
66.	082-4530	Foam — Sheet	1
67.	027-6004	Soldering Tag	1
68.	527-3125U	AC Outlet (for UL/CSA only)	2
69.	083-0780	Heat Sink Fin (3225PE only)	4
70.	083-0790	Heat Sink Power Envelope (3225PE only)	2
71.	095-7120	Plate AC Socket Cover (UL/CSA, A/A1 only)	1

EXPLODED VIEW

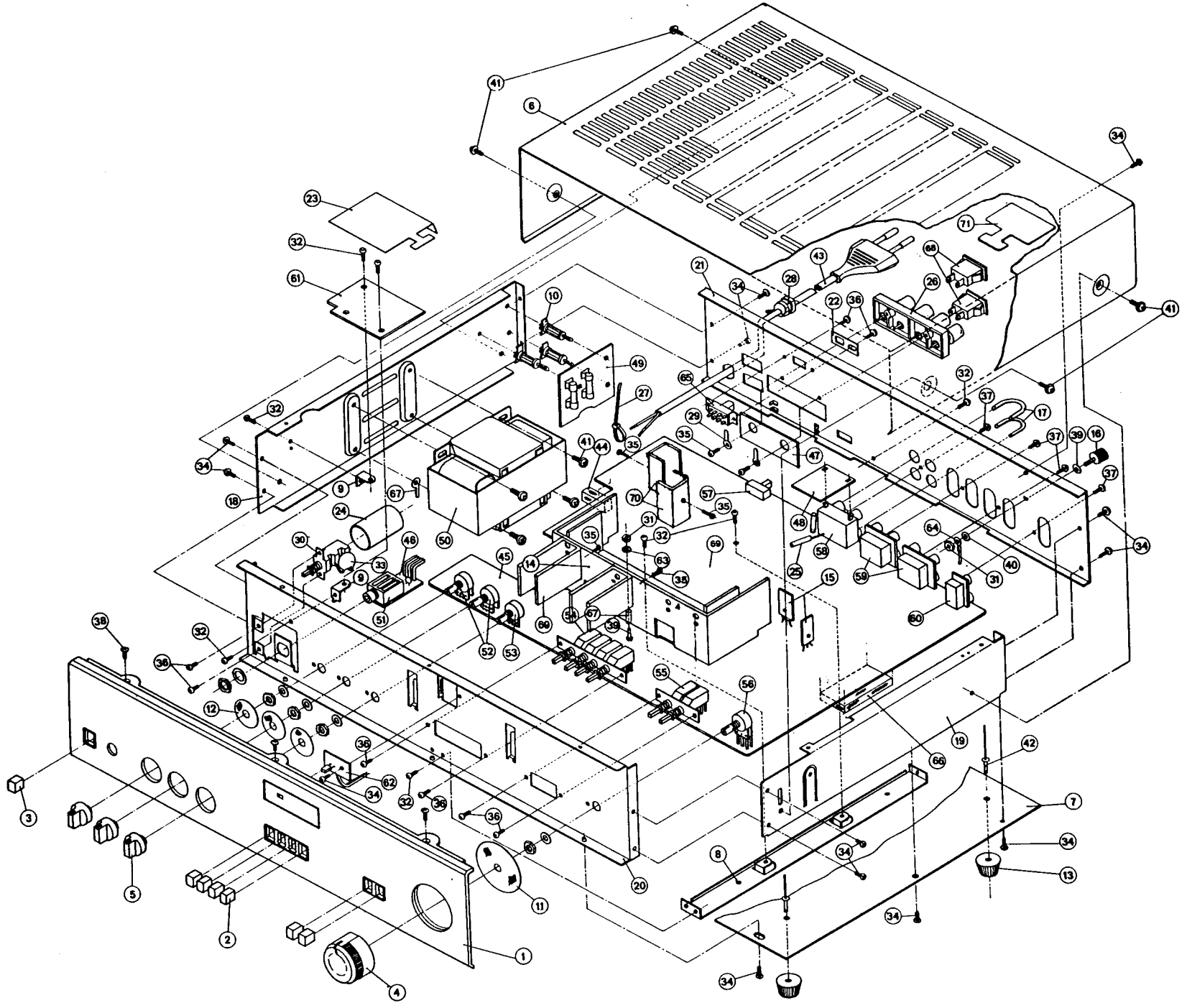

PACKING DIAGRAM

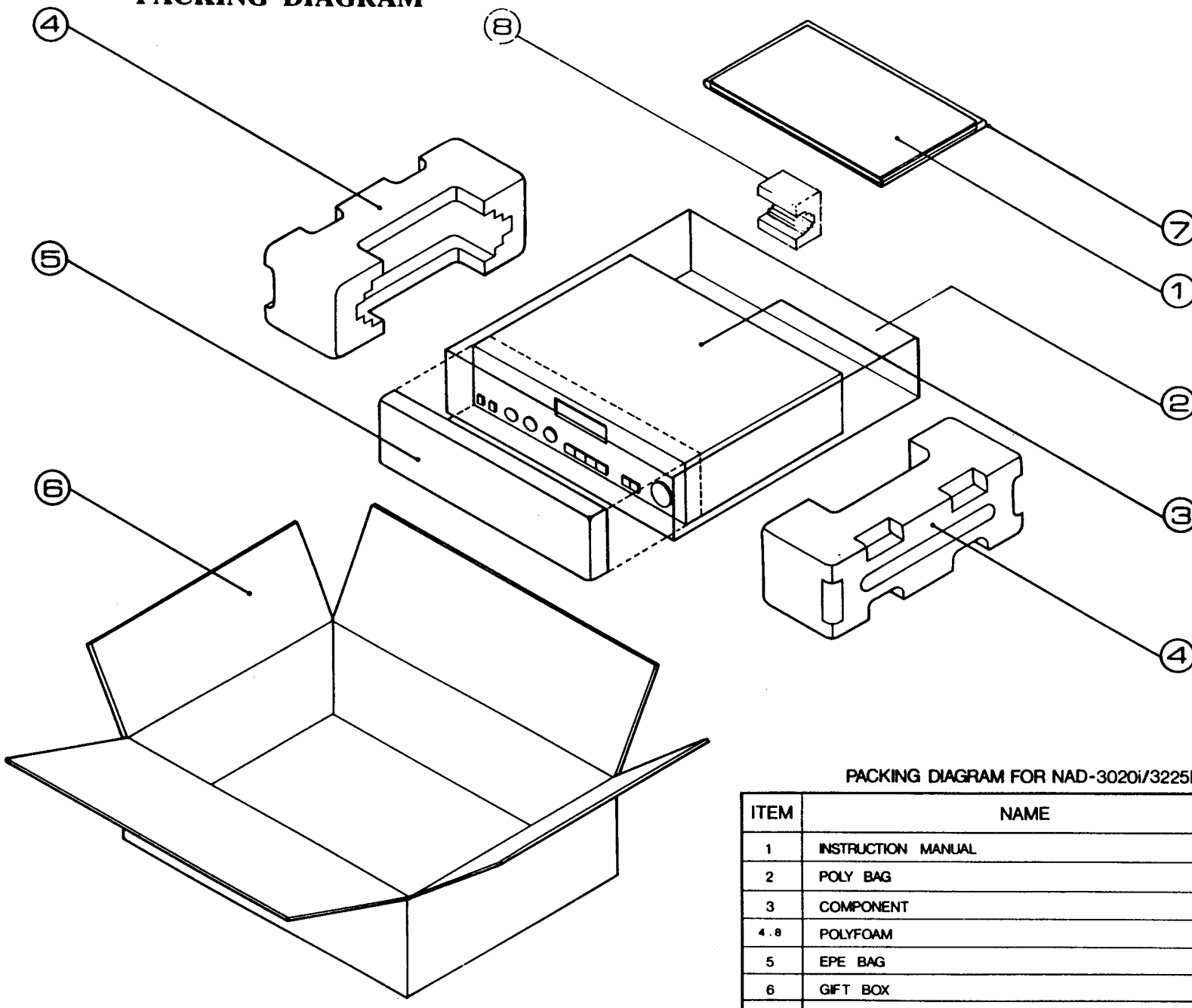

PACKING DIAGRAM FOR NAD-3020i/3225PE

ITEM	NAME	Q'TY
1	INSTRUCTION MANUAL	1
2	POLY BAG	1
3	COMPONENT	1
4.8	POLYFOAM	2 1
5	EPE BAG	1
6	GIFT BOX	1
7	POLY BAG	1